SLAMTEC

RPLIDAR A2

Low Cost 360 Degree Laser Range Scanner

Development Kit User Manual

Model： A2M7、A2M8、A2M12

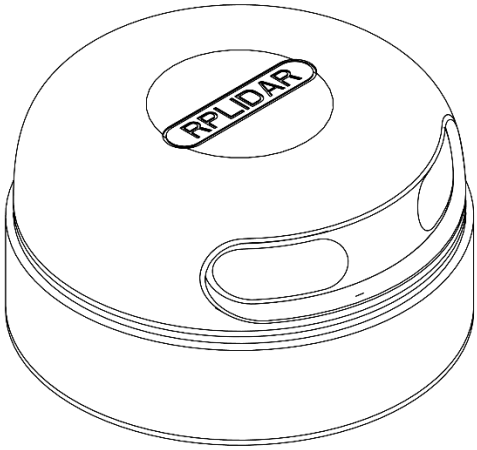

2026-02-27 rev.1.3

www.slamtec.com

Shanghai Slamtec.Co.,Ltd

CONTENTS 1

OVERVIEW 3

ITEMS IN THE DEVELOPMENT KIT 3
RPLIDAR A2 4
USB ADAPTER 4

CONNECTION AND USAGE 5

CONNECTION 5
INSTALL DRIVER FOR THE USB ADAPTER 5
RUN DEMO APPLICATION 7
TROUBLESHOOTING 9
MOTOR SPEED ADJUSTMENT 9

SDK INTRODUCTION AND USAGE 11

RPLIDAR A2 PIN DEFINITION AND SPECIFICATION 11
PIN DEFINITION FOR THE USB ADAPTER 12
USB-DC POWER CORD INSTRUCTION 12
CONFIGURE RPLIDAR A2 SCAN FREQUENCY 12
SDK USAGE 13

OPERATION RECOMMENDATION 14

PRE-HEATING FOR BEST PERFORMANCE 14
AMBIENT TEMPERATURE 14
AMBIENT LIGHT 14

REVISION HISTORY 14

APPENDIX 16

IMAGE AND TABLE INDEX 16

RPLIDAR A2 development kit includes the matched tools used for evaluating RPLIDAR's performance and initial development. After connecting the RPLIDAR A3 with PC via USB cable and connecting the power adapter to the USB cable, users can observe the cloud map of the environment scanning point collected by the RPLIDAR in RoboStudio and start development based on the SDK.

Items in the Development Kit

RPLIDAR Development Kit contains:

- RPLIDAR（PWM motor driver embedded）
- USB Adapter
- Micro-USB cable
- Power cable

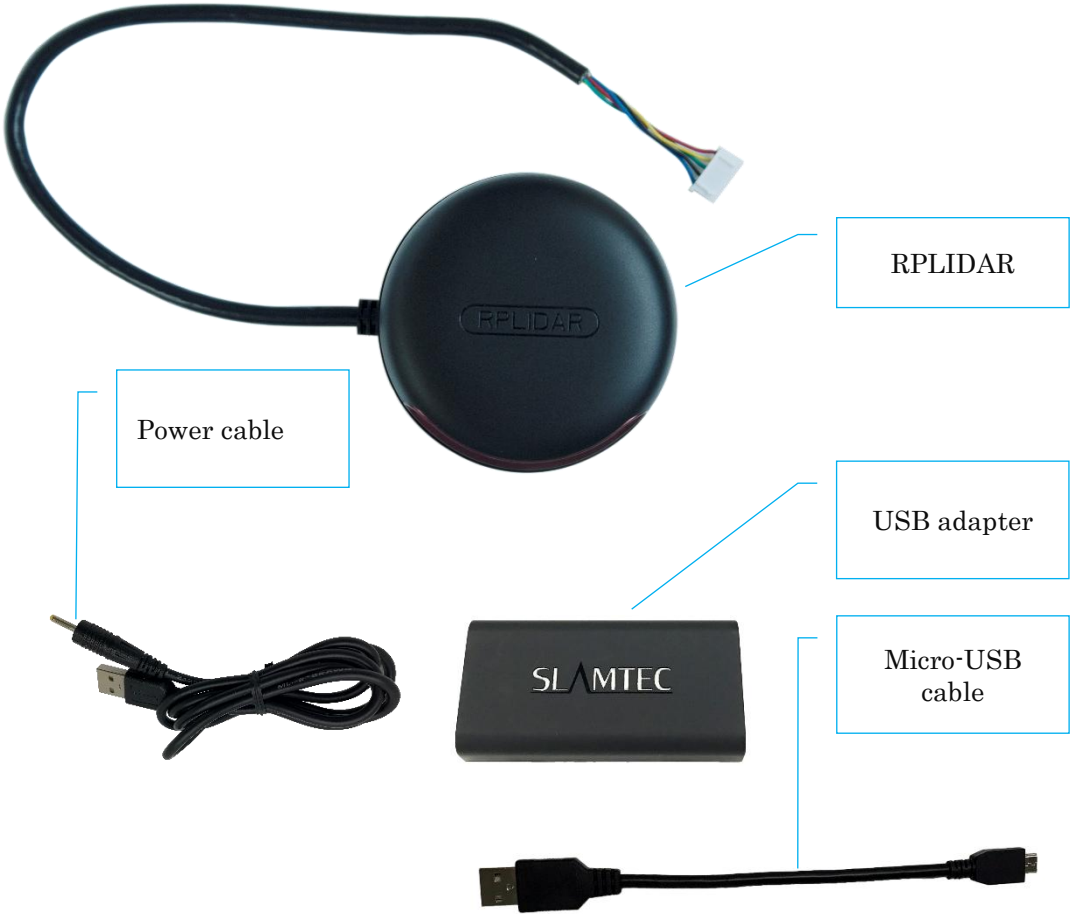

Figure 1-1 Items in the RPLIDAR Development Kit

Copyright (c) 2009-2017 RoboPeak Team
Copyright (c) 2013-2017 Shanghai Slamtec Co., Ltd.

RPLIDAR A2

Figure 1-2 The RPLIDAR A2

The RPLIDAR A2 development kit contains standard RPLIDAR A2 unit. The RPLIDAR is embedded with logic IO drivable motor controller which can be used to configure the scan frequency by tuning motor speed. Developers can also choose to turn off the motor for power saving purpose.

RPLIDAR usage and interface definition will be introduced in the coming sections.

USB Adapter

The USB adapter comes with a dial switch. It can be used to switch the Baud rate from 115200 to 256000 or vice versa. Please note that the Baud rate should be set as 256000 if the USB adapter is connected with RPLIDAR A2M7.And the Baud rate should be set as 115200 if the USB adapter is connected with RPLIDAR A2M6 and A2M8.

Figure 1-3 RPLIDAR Adapter

Copyright (c) 2009-2017 RoboPeak Team
Copyright (c) 2013-2017 Shanghai Slamtec Co., Ltd.

Connection

RPLIDAR A2 can be easily connected to PC according to the following steps.

1) Connect RPLIDAR A2 with the USB adapter.

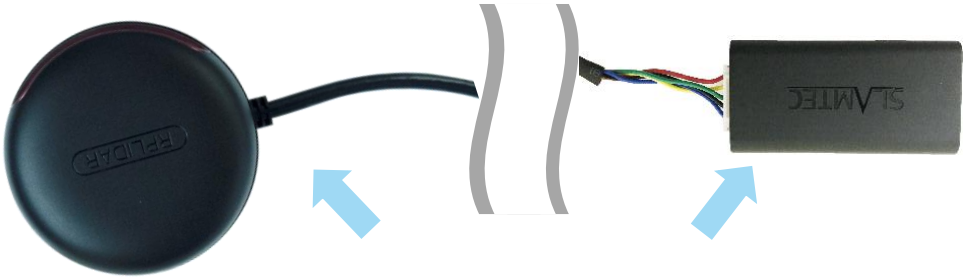

Figure 2-1 Connect RPLIDAR A2 and USB Adapter

2) Connect the USB adapter to your PC via the Micro-USB cable. If the PC is on, after connecting the USB cable to your PC and connecting the power adapter to the USB cable, the indicator light of the USB will light up but the RPLIDAR will not start scanning.

Figure 2-2 Connect the USB Adapter to PC via Micro-USB Cable

Install Driver for the USB Adapter

The USB adapter converts UART to USB by using CP2102 chip. You need to install the device driver for the chip. The driver can be found in the provided SDK package or downloaded from SLAMTEC open-source website:

https://github.com/Slamtec/rplidar_sdk/tree/master/tools/cp2102_driver

Here's the installation steps in Windows: after connecting the RPLIDAR with PC, please find the driver file "CP210x VCP Windows" and choose correct operating system version accordingly: x86 for 32-bit OS and x64 for 64-bit OS.

Copyright (c) 2009-2017 RoboPeak Team
Copyright (c) 2013-2017 Shanghai Slamtec Co., Ltd.

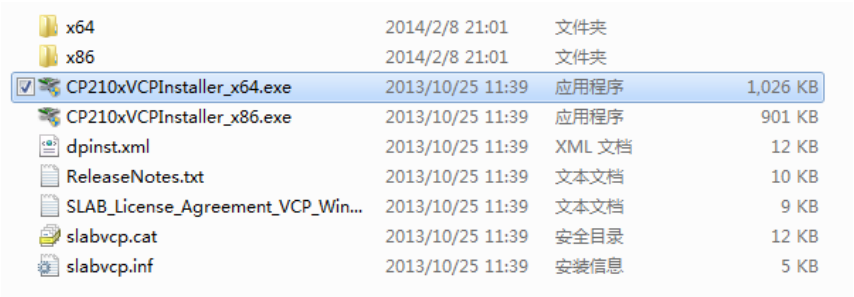

Figure 2-3 Choose USB Adapter Driver for Installation

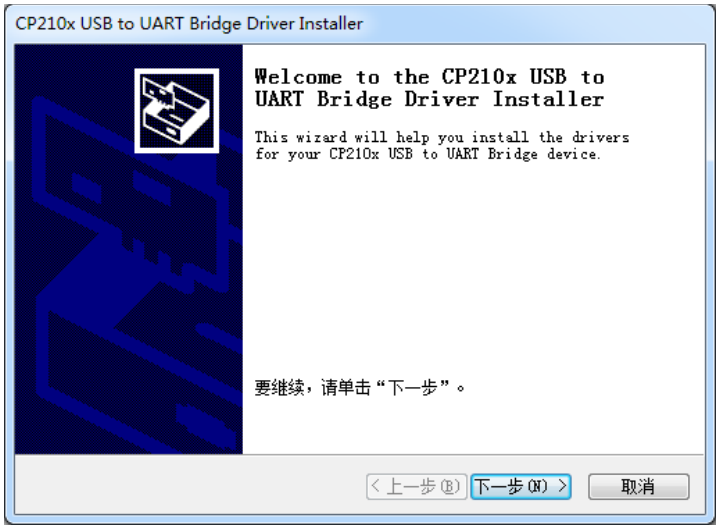

Figure 2-4 Start Page of USB Adapter Driver Installation

After Installing the driver according to the above installation steps, you will see corresponding serial port name in the [Control Panel] -> [Device and Printers]. Please refer to the below figure.

Figure 2-5 Recognized Serial Port Name Matched with the USB Adapter

Copyright (c) 2009-2017 RoboPeak Team
Copyright (c) 2013-2017 Shanghai Slamtec Co., Ltd.

Run Demo Application

SLAMTEC provides a Lidars plugin in RoboStudio for users in test and evaluation. You can view the scan result directly in the UI and save the scan result to files for further processing.

This GUI demo can only run under Windows. For Linux and MacOS users, please refer to the other simple demo provided in the SDK.

Please make sure you have connected RPLIDAR to PC by using USB adapter and installed the device driver correctly before running the demo application in RoboStudio. Launch RoboStudio and log in.

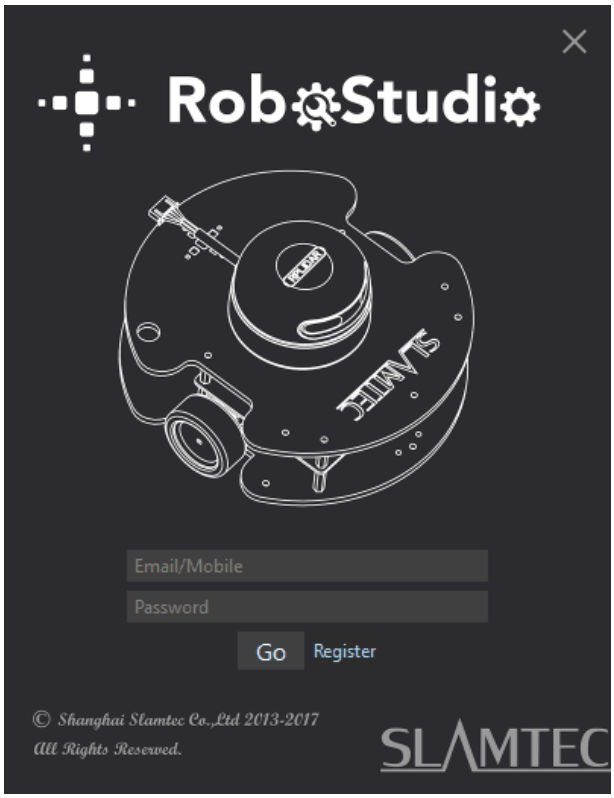

Figure 2-6 RoboStudio Login Page

If the connection is ok, you will see the user interface is shown as below. Click the " Lidars " option in the "File" menu, and then right click on the Lidars below the box area, the content of dialog box will be "Manual Connect to Lidar... / Auto Discovery to Lidar...".

Copyright (c) 2009-2017 RoboPeak Team
Copyright (c) 2013-2017 Shanghai Slamtec Co., Ltd.

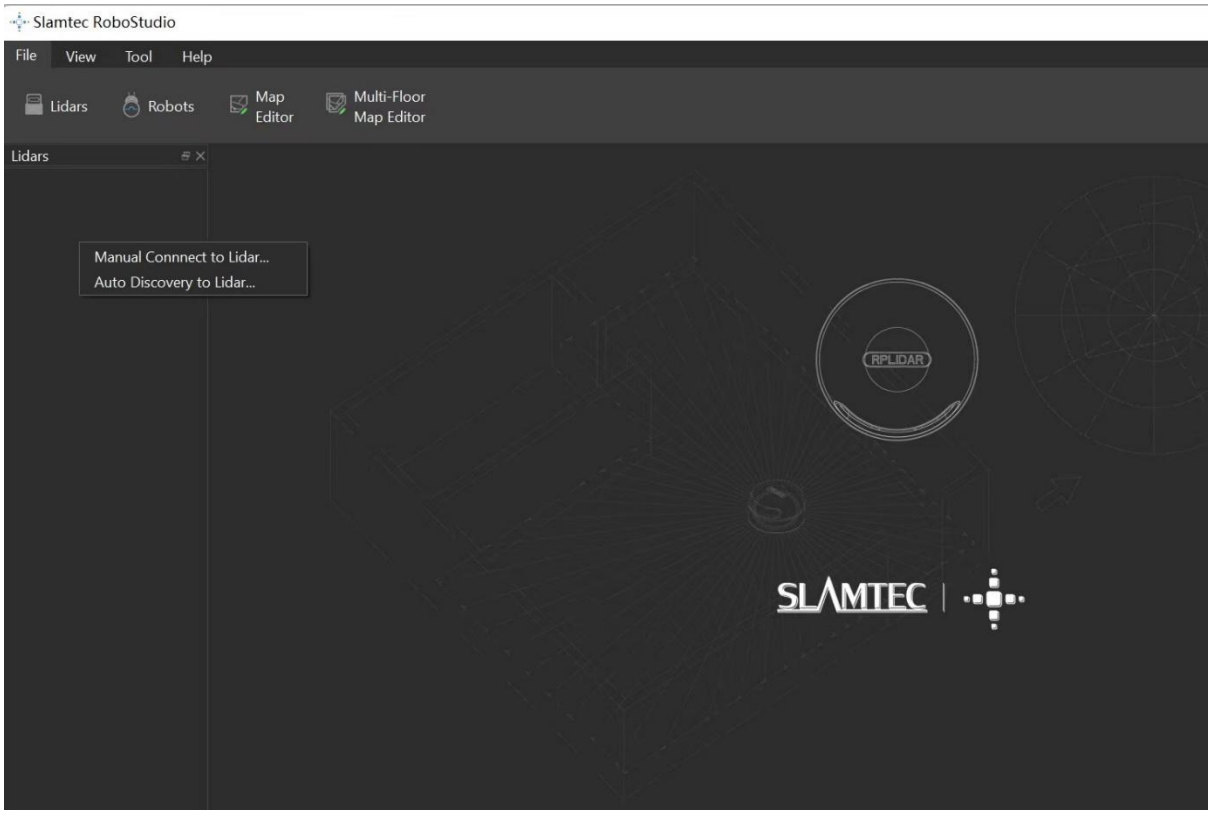

Figure 2-7 The Lidar Plugin in RoboStudio

The serial number, version and model of the RPLIDAR A2 will show next with its icon in the lidar control panel. The supported commands of RPLIDAR are showed in the tool bar. The descriptions are listed in the bellow table.

Button	Function	Description
	Restart RPLIDAR	Restart scan core to clear internal errors
	Save Scan Data	Save current scan data to the local file
	Stop Scan	Scan core enter power save mode
	Start Scan	Scan data will be displayed after scan core starting work
Stability	Work Mode Switch	Switch among different work modes to fit in specific environments
	Adjust Motor Speed	Adjust the motor speed as required

Figure 2-8 The Supported Commands of RPLIDAR in RoboStudio

Press the Start Scan button , the scan data will be displayed as below(by default, the motor rotating speed should be about 10Hz.):

Copyright (c) 2009-2017 RoboPeak Team
Copyright (c) 2013-2017 Shanghai Slamtec Co., Ltd.

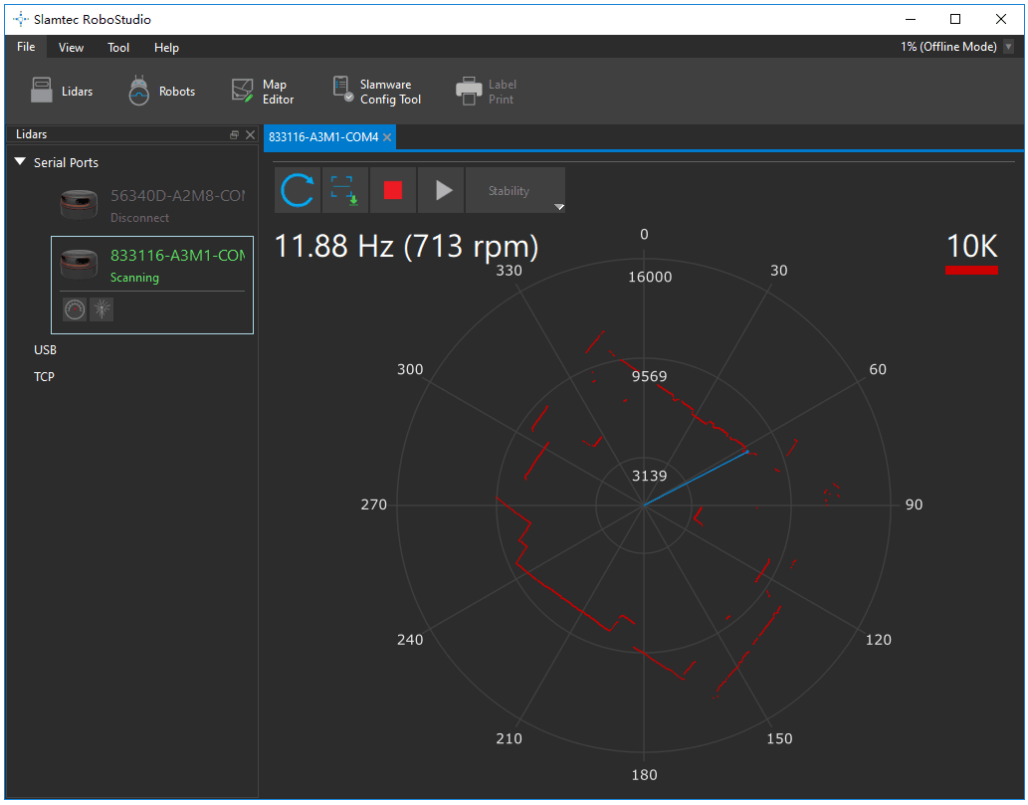

Figure 2-9 The Scan Outline by RPLIDAR in RoboStudio

Right click in the major working area to choose a range so as to zoom in or out the view.

The scan frequency is also showed in the above interface.

Troubleshooting

When the scan core or the laser power works abnormally, the scan core will enter protection mode. This state can be retrieved via SDK API. If such scenario happened, please send restart command to reset the scan core.

Motor Speed Adjustment

During the running process, different motor rotating speed can be achieved by pressing the button, which can fit in different working environments or meet specific requirements. There will be a speed adjustment dialog box and dash board popped up for users to enter required speed. After entering a value, the motor will work as the settled rotating speed automatically. User can also drag the sliding handle to the required rotating speed.

Copyright (c) 2009-2017 RoboPeak Team
Copyright (c) 2013-2017 Shanghai Slamtec Co., Ltd.

The current actual rotating speed will show in the upper left corner of the major work area. For instance, the actual rotating speed in the following screenshot is 11.92Hz.

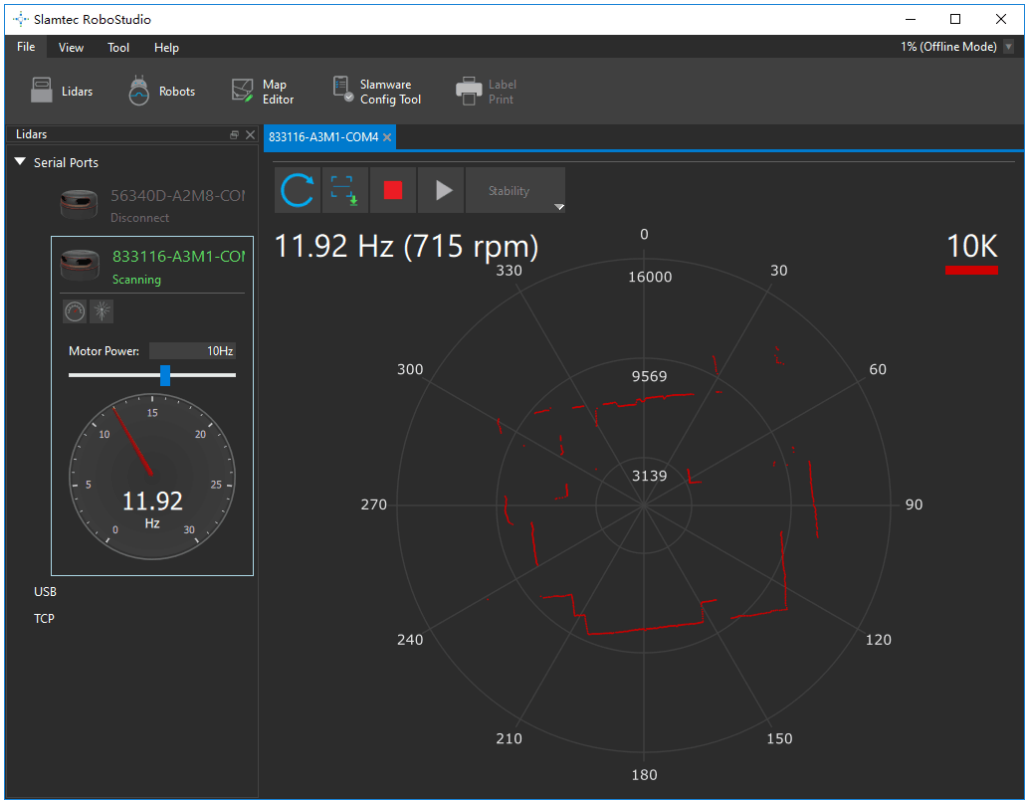

Figure 2-10 The Motor Speed Adjustment Dialogue of RPLIDAR in RoboStudio

Copyright (c) 2009-2017 RoboPeak Team
Copyright (c) 2013-2017 Shanghai Slamtec Co., Ltd.

RPLIDAR A2 Pin Definition and Specification

RPLIDAR A2 is using XH2.54-5P specification plug. Please use it with socket that meet the specification of XH2.54-5P. The detailed pin definition is shown as below:

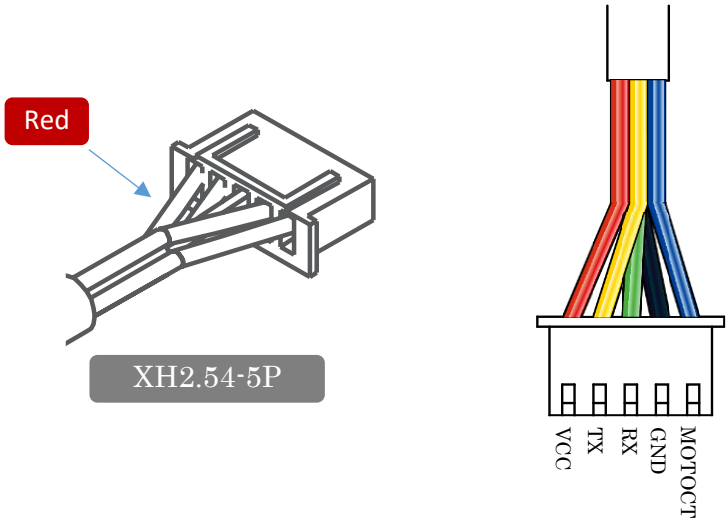

Figure 3-1 RPLIDAR A2 Pins

Color	Signal name	Type	Description	Minimum	Typical	Maximum
Red	VCC	Power	Power supply for the whole RPLIDAR	4.9V	5V	5.2V
Yellow	TX	Output	Serial output for RPLIDAR scan core	0V	3.3V	3.5V
Green	RX	Input	Serial input for RPLIDAR scan core	0V	3.3V	3.5V
Black	GND	Power	GND	0V	0V	0V
Blue	MOTOCTL	Input (pull down)	Enable pin for RPLIDAR scan motor/PWM control signal (active high)	0V	3.3V	5V

Figure 3-2 RPLIDAR Pin Definition and Specification

RPLIDAR A2 uses the one 5V DC power supply for powering the scan motor and the scan core at the same time. No extra power is required.

With build-in and speed-adjustable motor driver, RPLIDAR A2 can control the start, the stop and the rotating speed of the motor via the MOTOCTL signal.

- Reference Design for RPLIDAR development

Copyright (c) 2009-2017 RoboPeak Team
Copyright (c) 2013-2017 Shanghai Slamtec Co., Ltd.

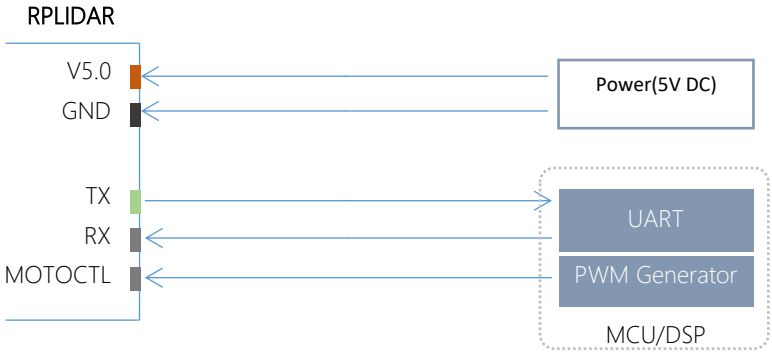

Figure 3-3 RPLIDAR A2 Pins Reference Design

Pin Definition for the USB Adapter

The USB adapter is also using XH2.54-5P specification socket, and it can be connected with RPLIDAR A2 directly. The pin definition is the same as the RPLIDAR A3.

USB-DC power cord instruction

The developer kit provides USB-DC power cord for the user to connect additional power to the USB adapter for additional power supply. For the output voltage and current requirements of the power supply, please refer to the datasheet of the corresponding lidar model.

Configure RPLIDAR A2 Scan Frequency

The motor speed control signal MOTOCTL can be configured directly via the USB adapter of RPLIDAR A2. Therefore, the RPLIDAR A2's scan frequency can be modified by invoking the related functions in the SDK to configure the motor speed.

Without the USB adapter, users can also control the speed by setting the PWM duty cycle of MOTOCTL. Please note that the PWM frequency is 20kHz. For more detailed parameter and index, please refer to the datasheet.

Please refer to the RPLIDAR protocol and application note for more information and the SDK for the sample code on RPLIDAR scan frequency.

Copyright (c) 2009-2017 RoboPeak Team
Copyright (c) 2013-2017 Shanghai Slamtec Co., Ltd.

SDK Usage

SLAMTEC provides RPLIDAR SDK support on both Windows and Linux platform. And users can embed the SDK source code to other operational system or embedded system quickly. Please refer to the SDK document for more information.

Copyright (c) 2009-2017 RoboPeak Team
Copyright (c) 2013-2017 Shanghai Slamtec Co., Ltd.

Pre-Heating for Best Performance

The scan core will be heating when start working. We recommend pre-heating RPLIDAR (Start the scan mode and the scan motor is rotating) for more than 2 minutes to get the best measurement accuracy.

Ambient Temperature

RPLIDAR's measurement resolution is sensitive to the ambient temperature. Improper use may even damage the sensor. Please avoid using RPLIDAR in extreme high temperature (>40 degree) and too low temperature (<-10 degree).

Ambient Light

Although RPLIDAR A2 is not sensitive to ambient light, improper use may still lead to errors. In indoor environment, please avoid lighting RPLIDAR A2 with strong light source such as high-power laser.

In outdoor environment, please avoid facing RPLIDAR A2 directly to sun light. This may lead to permanent damage to the image sensor of RPLIDAR A2 and make the measurement invalid.

The standard version of RPLIDAR A2M6&A2M8 may have less measurement range in the environment with strong sunlight.

Compared with RPLIDAR A2M6&A2M8, RPLIDAR A2M7 performs better to resist ambient light interference, which supports it to work properly in outdoor environment.

RPLIDAR A2M7 can work in two modes: enhanced mode and outdoor mode.

Enhanced mode is designed for indoor environment. Typical indoor light (including situations without light) will not affect the performance of RPLIDAR. Strong light (such as high power laser) will harm the optical system of LIDAR, which should be avoided.

During outdoor mode, RPLIDAR A2M7 can work normally to detect objects under direct ambient light. However, the ranging distance might be shorter under strong direct sunlight and it is still necessary to protect the optical system from direct sunlight.

Copyright (c) 2009-2017 RoboPeak Team
Copyright (c) 2013-2017 Shanghai Slamtec Co., Ltd.

Date	Version	Description
2019-10-23	1.0	RPLIDAR A2 series initial version.
2021-04-02	1.1	Modify the maximum VCC voltage of 5.5V to 5.2V in Figure 3-2.
2022-08-05	1.2	Update Figure 3-2.
2026-02-27	1.3	Update the download link for the USB Adapter Driver; Add model A2M12.

Copyright (c) 2009-2017 RoboPeak Team
Copyright (c) 2013-2017 Shanghai Slamtec Co., Ltd.

Image and Table Index

Figure 1-1 Items in the RPLIDAR Development Kit 3
Figure 1-2 The RPLIDAR A2 4
Figure 1-3 RPLIDAR Adapter 4
Figure 2-1 Connect RPLIDAR A2 and USB Adapter 5
Figure 2-2 Connect the USB Adapter to PC via Micro-USB Cable 5
Figure 2-3 Choose USB Adapter Driver for Installation 6
Figure 2-4 Start Page of USB Adapter Driver Installation 6
Figure 2-5 Recognized Serial Port Name Matched with the USB Adapter 6
Figure 2-6 RoboStudio Login Page 7
Figure 2-7 The Lidar Plugin in RoboStudio 8
Figure 2-8 The Supported Commands of RPLIDAR in RoboStudio 8
Figure 2-9 The Scan Outline by RPLIDAR in RoboStudio 9
Figure 2-10 The Motor Speed Adjustment Dialogue of RPLIDAR in RoboStudio 10
Figure 3-1 RPLIDAR A2 Pins 11
Figure 3-2 RPLIDAR Pin Definition and Specification 11
Figure 3-3 RPLIDAR A2 Pins Reference Design 12

Copyright (c) 2009-2017 RoboPeak Team
Copyright (c) 2013-2017 Shanghai Slamtec Co., Ltd.